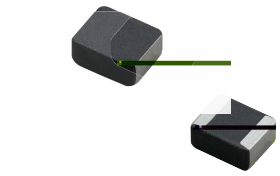
MDE Series

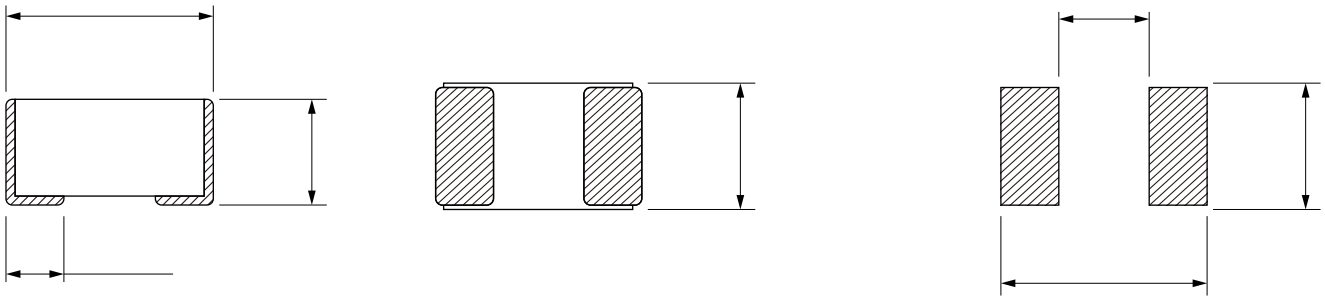


FEATURES

- High satura on current realized by material proper es and structure design.
- Low DC resistance to achieve high conversion e ciency and lower temperature rising.
- Low Profile.
- Magne cally shielded structure to accomplish high resolu on in EMC protec on.
- Halogen free, Lead Free, RoHS Compliance.
- Opera ng temperature: -40 to +125 °C
- Quan ty: 3000PCS

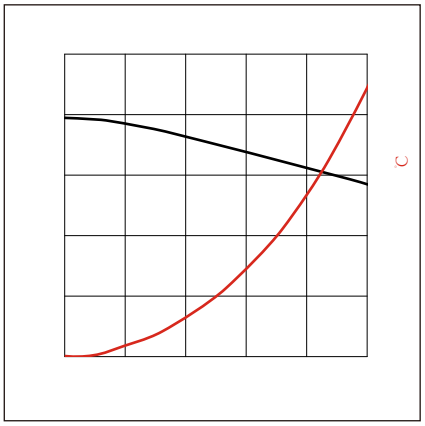
APPLICATION

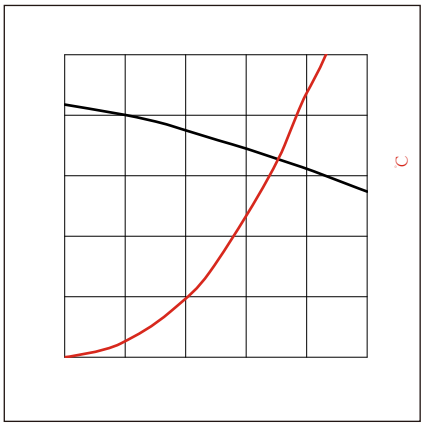
- Generic in portable DC to DC converter line.
- Smart phone, PAD
- DC/DC converter
- Thin-type power supply module.

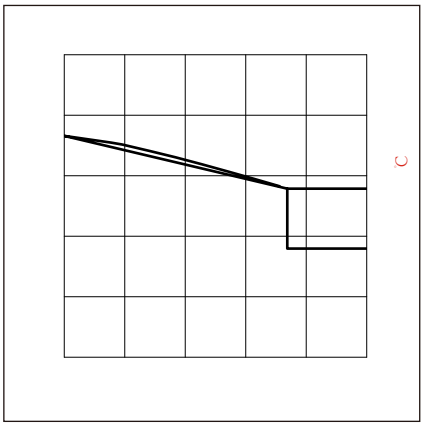


Part No	Inductance @ 1MHz/1V (μH)	Tolerance	DC Resistance Typ. (mΩ)	DC Resistance Max. (mΩ)	Satura on Current Typ. (A)	Satura on Current Max. (A)	Temperature Rise Current Typ. (A)	Temperature Rise Current Max. (A)
MDE252012-R47M	0.47	±20%	21	25	5.3	4.95	4.60	4.18
MDE252012-R68M	0.68	±20%	29	35	5.0	4.63	3.70	3.36
MDE252012-1R0M	1.00	±20%	41	49	4.4	4.04	3.50	3.18
MDE252012-1R5M	1.50	±20%	64	77	3.2	2.91	2.50	2.27
MDE252012-2R2M	2.20	±20%	85	98	3.0	2.73	2.27	2.06
MDE252012-4R7M	4.70	±20%	196	235	1.9	1.58	1.55	1.40

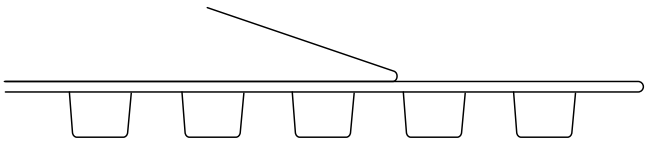
Temperature rising current will cause the coil temperature approximate ΔT40 °C
Satura on current will cause to drop approximately 30 %







:



:

